SAPPHIRE

14' x 36'

AQUA RING COLLECTION

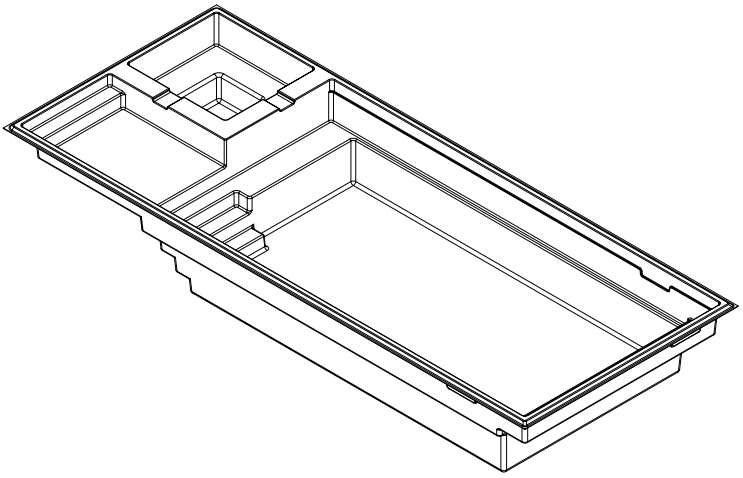

Available colors

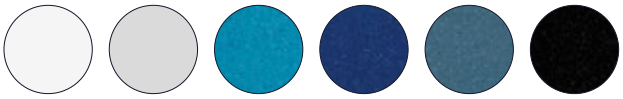
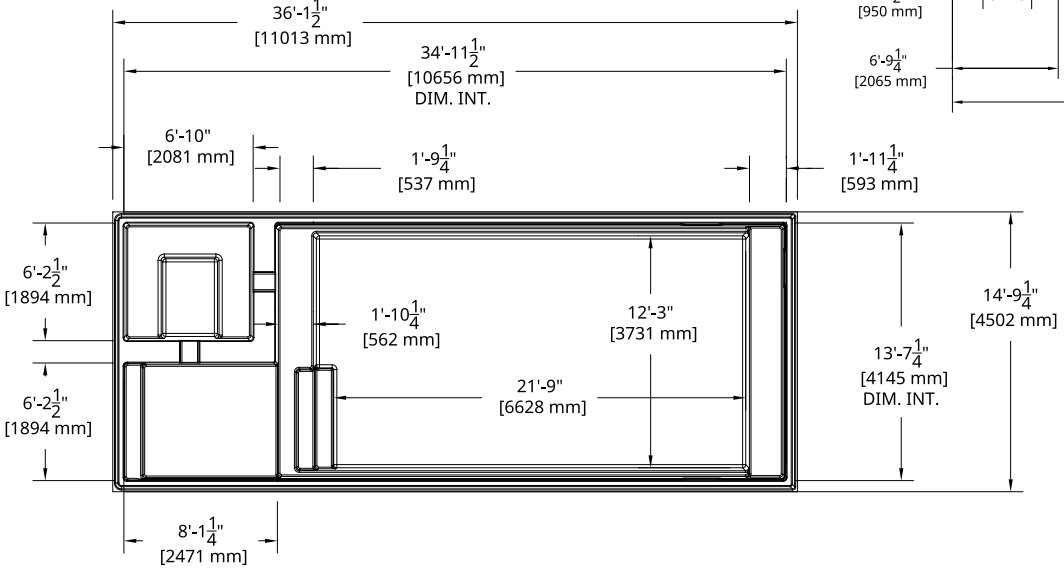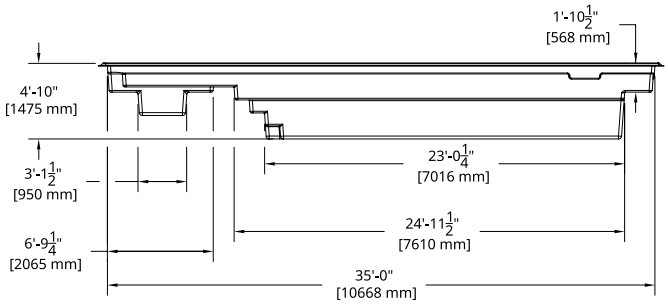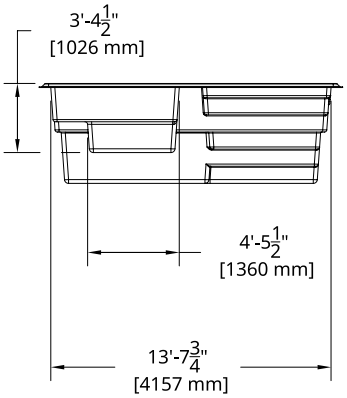
SAPPHIRE MODEL	
DIMENSIONS	14' x 36'
DEPTH	4' 10"
WEIGHT EMPTY POOL	2 996 lbs · 1 359 kg
TOTAL INTERIOR VOLUME	1 538.06 ft³ · 43.55 m³
TOTAL WATER VOLUME	43 553 L · 11 505 gal
SPA INTERIOR VOLUME	79.4 ft³ · 2.23 m³
SPA WATER VOLUME	2 237 L · 591 gal